Work Order ID 65099

Thursday, January 06, 2011 10:42:44 AM

Item ID: D3488-042
Revision ID:
Item Name: Blade Fitting Assembly, RH

Accept

Setup Start
Stop

Start Date: 1/6/2011 **Start Qty:** 8.00
Required Date: 1/13/2011 **Req'd Qty:** 8.00
Reference:

Cust Item ID:
Customer:

Approvals: **Process Plan:** N **Date:** 11-01-6 **Tooling:** _____ **Date:** _____
QC: _____ **Date:** _____ **SPC (Y/N):** _____ **Date:** _____

Run Start
Stop

Sequence ID/ Work Center ID	Operation Description	Set Up/ Run Hours	Tool ID	Tool #	Plan Code	Accept Qty	Reject Qty	Reject Number	Insp. Stamp
Draw Nbr	**Revision Nbr**								
D3488	Rev B								
100	DOOSAN LATHE	0.00							
Doosan	**Memo**	0.00							
Doosan Lathe	1-Turn as per Dwg DSK 101 & Folio FA627□2-Deburr								
110	QC2- Inspect parts off machine FAI/FAIB	0.00							
QC	**Memo**	0.00							
Quality Control									
120	HAAS CNC VERTICAL MACHINING #1	0.00							
HAAS 1	**Memo**	0.00							
HAAS CNC vertical machine #1	1-Machine as per Folio FA627 & Dwg D3488□2-Deburr								

11-2-16 8

11-2-16 8

JL 11/03/03 8

Dart Aerospace Ltd

W/O:		WORK ORDER CHANGES					
DATE	STEP	PROCEDURE CHANGE	By	Date	Qty	Approval Chief Eng / Prod Mgr	Approval QC Inspector

Part No: _____ **PAR #:** _____ **Fault Category:** _____ **NCR:** Yes No **DQA:** _____ **Date:** _____

Resolution: _____ **Disposition:** _____ **QA: N/C Closed:** _____ **Date:** _____

NCR:		WORK ORDER NON-CONFORMANCE (NCR)						
DATE	STEP	Description of NC Section A	Corrective Action Section B			Verification Section C	Approval Chief Eng	Approval QC Inspector
			Initial Chief Eng	Action Description Chief Eng	Sign & Date			

NOTE: Date & initial all entries

H:\fFORMS\Quality Assurance\approved QA\NCRWO RevE

Work Order ID 65099

Thursday, January 06, 2011 10:42:44 AM

Item ID: D3488-042 **Accept** **Setup Start** **Stop**

Revision ID:

Item Name: Blade Fitting Assembly, RH

Start Date: 1/6/2011 **Start Qty:** 8.00 **Cust Item ID:**

Required Date: 1/13/2011 **Req'd Qty:** 8.00 **Customer:**

Reference:

Approvals: **Process Plan:** _____ **Date:** _____ **Tooling:** _____ **Date:** _____ **Run Start** **Stop**

QC: _____ **Date:** _____ **SPC (Y/N):** _____ **Date:** _____

Sequence ID/ Work Center ID	Operation Description	Set Up/ Run Hours	Tool ID	Tool #	Plan Code	Accept Qty	Reject Qty	Reject Number	Insp. Stamp
130	QC2- Inspect parts off machine FAI/FAIB	0.00 JL 11/03/03							
QC Quality Control	Memo	0.00				8	ø		
140	QC8- Inspect parts - second check	0.00 11/03/03							
QC Quality Control	Memo	0.00				8	ø		
150	Chemical Conversion Coat per QSI005 4.1	0.00							
HandFinish Hand Finishing	Memo	0.00 =7 M-L 11/03/04				8X			

Dart Aerospace Ltd

W/O:		WORK ORDER CHANGES					
DATE	STEP	PROCEDURE CHANGE	By	Date	Qty	Approval Chief Eng / Prod Mgr	Approval QC Inspector

Part No: _____ **PAR #:** _____ **Fault Category:** _____ **NCR:** Yes No **DQA:** _____ **Date:** _____

Resolution: _____ **Disposition:** _____ **QA: N/C Closed:** _____ **Date:** _____

NCR:		WORK ORDER NON-CONFORMANCE (NCR)						
DATE	STEP	Description of NC Section A	Corrective Action Section B			Verification Section C	Approval Chief Eng	Approval QC Inspector
			Initial Chief Eng	Action Description Chief Eng	Sign & Date			

NOTE: Date & initial all entries

H:\fFORMS\Quality Assurance\approved QA\NCRWO RevE

Work Order ID 65099

Thursday, January 06, 2011 10:42:44 AM

Item ID: D3488-042 **Accept** **Setup Start**

Revision ID: **Stop**

Item Name: Blade Fitting Assembly, RH

Start Date: 1/6/2011 **Start Qty:** 8.00 **Cust Item ID:**

Required Date: 1/13/2011 **Req'd Qty:** 8.00 **Customer:**

Reference:

Approvals: **Process Plan:** _____ **Date:** _____ **Tooling:** _____ **Date:** _____ **Run Start**

QC: _____ **Date:** _____ **SPC (Y/N):** _____ **Date:** _____ **Stop**

Sequence ID/ Work Center ID	Operation Description M115951	Set Up/ Run Hours	Tool ID	Tool #	Plan Code	Accept Qty	Reject Qty	Reject Number	Insp. Stamp
160	White Gloss(Ref:4.3.5.1) per QSI005 4.3-Alum	0.00							
Powdercoat						8X			m 11/03/04
Powder Coating	**Memo**	0.00							
	START TIME: 9:20 ☐FINISH TIME: 9:50 ☐OVEN TEMPERATURE: 320 °F								
170	QC3- Inspect Part Finish	0.00							
QC						8			11-3-7
Quality Control	**Memo**	0.00							
180		0.00							
HandFinish	HandFinishing					x8			11/03/15
Hand Finishing	**Memo**	0.00							
	Install Inserts as per Dwg D3488								

Dart Aerospace Ltd

W/O:		WORK ORDER CHANGES					
DATE	STEP	PROCEDURE CHANGE	By	Date	Qty	Approval Chief Eng / Prod Mgr	Approval QC Inspector

Part No: _____ **PAR #:** _____ **Fault Category:** _____ **NCR:** Yes No **DQA:** _____ **Date:** _____

Resolution: _____ **Disposition:** _____ **QA: N/C Closed:** _____ **Date:** _____

NCR:		WORK ORDER NON-CONFORMANCE (NCR)						
DATE	STEP	Description of NC Section A	Corrective Action Section B			Verification Section C	Approval Chief Eng	Approval QC Inspector
			Initial Chief Eng	Action Description Chief Eng	Sign & Date			

NOTE: Date & initial all entries

H:\fFORMS\Quality Assurance\approved QA\NCRWO RevE

Work Order ID 65099

Thursday, January 06, 2011 10:42:44 AM

Item ID: D3488-042 **Accept** **Setup Start** **Stop**

Revision ID:

Item Name: Blade Fitting Assembly, RH

Start Date: 1/6/2011 **Start Qty:** 8.00 **Cust Item ID:**

Required Date: 1/13/2011 **Req'd Qty:** 8.00 **Customer:**

Reference:

Approvals: **Process Plan:** _____ **Date:** _____ **Tooling:** _____ **Date:** _____ **Run Start** **Stop**

QC: _____ **Date:** _____ **SPC (Y/N):** _____ **Date:** _____

Sequence ID/ Work Center ID	Operation Description	Set Up/ Run Hours	Tool ID	Tool #	Plan Code	Accept Qty	Reject Qty	Reject Number	Insp. Stamp
190	QC5- Inspect part completeness to step on W/O	0.00				x 8			
QC	Memo	0.00				-012			
Quality Control									
200	Identify as per dwg & Stock Location: FP-8	0.00				x8	ϕ	11/03/15	
Packaging	Memo	0.00							
Packaging									
210	QC21- Final Inspection - Work Order Release	0.00					11/3/16		
QC	Memo	0.00							
Quality Control									

11-03-15

Dart Aerospace Ltd

W/O:		WORK ORDER CHANGES					
DATE	STEP	PROCEDURE CHANGE	By	Date	Qty	Approval Chief Eng / Prod Mgr	Approval QC Inspector

Part No: _____ **PAR #:** _____ **Fault Category:** _____ **NCR:** Yes No **DQA:** _____ **Date:** _____

Resolution: _____ **Disposition:** _____ **QA: N/C Closed:** _____ **Date:** _____

NCR:		WORK ORDER NON-CONFORMANCE (NCR)						
DATE	STEP	Description of NC Section A	Corrective Action Section B			Verification Section C	Approval Chief Eng	Approval QC Inspector
			Initial Chief Eng	Action Description Chief Eng	Sign & Date			

NOTE: Date & initial all entries

H:\fFORMS\Quality Assurance\approved QA\NCRWO RevE

Picklist Print

Thursday, January 06, 2011 10:42:48 AM

Work Order ID: 65099

Parent Item: D3488-042

Parent Item Name: Blade Fitting Assembly, RH

Start Date: 1/6/2011 **Required Date:** 1/13/2011

Start Qty: 8.00 **Required Qty:** 8.00

Comments:
IPP Rev:A New Issue 06-02-28 JLM
IPP Rev:B As per Rev B 06-03-30 JLM
IPP Rev:C Now On Doosan Lathe JLM Verified BY:DD

Component Item ID/ Item Name	Replacement Item ID	Mfg/ Purch	Bin Item	Primary Location	Last Location	Route Seq ID	Unit of Measure	Qty on Hand	Qty per Kit	Total Qty	Qty Issued	Date Issued	Status
ALS7-1032-225 INSERT		Purchased	No				Each	700.0000	4	32 ML 11/03/11			
				Location			**Loc Qty**		**Loc Code**				
				ST282			700		M110768	32			
					100896		100						
					111529		300						
					111581		300						
D6103-003 Round Billet, Aluminum		Manufactured	No				Each	3.0000	1	8 ml 11-2-16			
				Location			**Loc Qty**		**Loc Code**				
				MAT43			3						
					55430		3						
				65955						8			

Dart Aerospace Ltd

W/O:		WORK ORDER CHANGES					
DATE	STEP	PROCEDURE CHANGE	By	Date	Qty	Approval Chief Eng / Prod Mgr	Approval QC Inspector

Part No: _____ **PAR #:** _____ **Fault Category:** _____ **NCR:** Yes No **DQA:** _____ **Date:** _____

Resolution: _____ **Disposition:** _____ **QA: N/C Closed:** _____ **Date:** _____

NCR:		WORK ORDER NON-CONFORMANCE (NCR)						
DATE	STEP	Description of NC Section A	Corrective Action Section B			Verification Section C	Approval Chief Eng	Approval QC Inspector
			Initial Chief Eng	Action Description Chief Eng	Sign & Date			

NOTE: Date & initial all entries

DART AEROSPACE LTD	Work Order:	65099
Description: Blade Fitting, RH / Turning Detail for D3488-1/-2	**Part Number:**	**D3488-2**
Inspection Dwg: D3488 / DSK101 **Rev:** B / D		**Page 1 of 2**

FIRST ARTICLE INSPECTION CHECKLIST

[X] **First Article** [ ] **Prototype**

Drawing Dimension	Tolerance	Actual Dimension	Accept	Reject	Method of Inspection	Comments
Lathe Section						
Ø2.150	+/-0.005	2.150	✓		20-02	
Ø2.780	+/-0.005	2.778	✓			
Ø3.125	+/-0.010	3.124	✓			
Ø3.346	+/-0.010	3.348	✓			
0.125 x 45°	+/-0.010 x +/-0.1°	.120	✓			
8.000	+0.030/-0.000	8.013	✓			
9.250	+/-0.010	9.249	✓			
0.188	+/-0.010	.188	✓			
R0.032	+/-0.010	.030	✓			
R0.062	+/-0.010	.060	✓			
Ø0.297	+0.005/-0.001	.299	✓			
Ø0.430	+/-0.010	.430	✓			
0.100	+/-0.010	.100	✓			
0.125	+/-0.010	.128	✓			
2.620	+/-0.010	2.617	✓			
3.500	+/-0.010	3.500	✓			
1.005	+/-0.010	1.005	✓			
Ø0.484	+0.005/-0.001	.484	✓			
1.180	+/-0.010	1.180	✓			
3.150	+/-0.010	3.150	✓			
3.070	+/-0.010	3.070	✓			
R0.063	+/-0.010	.063	✓			

Dart Aerospace Ltd

W/O:		WORK ORDER CHANGES					
DATE	STEP	PROCEDURE CHANGE	By	Date	Qty	Approval Chief Eng / Prod Mgr	Approval QC Inspector

Part No: _____ **PAR #:** _____ **Fault Category:** _____ **NCR:** Yes No **DQA:** _____ **Date:** _____

Resolution: _____ **Disposition:** _____ **QA: N/C Closed:** _____ **Date:** _____

NCR:		WORK ORDER NON-CONFORMANCE (NCR)						
DATE	STEP	Description of NC Section A	Corrective Action Section B			Verification Section C	Approval Chief Eng	Approval QC Inspector
			Initial Chief Eng	Action Description Chief Eng	Sign & Date			

NOTE: Date & initial all entries

DART AEROSPACE LTD	Work Order:	45099
Description: Blade Fitting, RH / Turning Detail for D3488-1/-2	**Part Number:**	D3488-2
Inspection Dwg: D3488 / DSK101 **Rev:** B / D		Page 2 of 2

Drawing Dimension	Tolerance	Actual Dimension	Accept	Reject	Method of Inspection	Comments
Milling Section						
Ø0.508	+0.006/-0.001	.508	✓		Vern JL3	
0.750	+/-0.010	.757	✓		H-G	
1.500	+/-0.010	1.500	✓		Vern JL3	
11.18	+/-0.030	11.185	✓		H-G	
R0.062	+/-0.010	.062	✓		R-G	
0.125	+/-0.010	.130	✓		Vern JL3	
0.590	+/-0.010	.587	✓		H-G	
0.793	+/-0.010	.796	✓		"	
1.351	+/-0.010	1.349	✓		"	
1.317	+/-0.010	1.314	✓			
1.802	+/-0.010	1.805	✓		"	

Measured by:	JL	Audited by:	[illegible]	Prototype Approval:	N/A
Date:	11/03/03	Date:	11/03/03	Date:	N/A

Rev	Date	Change	Revised by	Approved
A	06.03.31	New Issue	KJ/JLM	
B	08.09.19	Reformat P/O D3488-042	KJ/JLM	
C	08.12.02	Dimension 8.000 removed	KJ/JLM	[illegible]

Dart Aerospace Ltd

W/O:		WORK ORDER CHANGES					
DATE	STEP	PROCEDURE CHANGE	By	Date	Qty	Approval Chief Eng / Prod Mgr	Approval QC Inspector

Part No: _____ **PAR #:** _____ **Fault Category:** _____ **NCR:** Yes No **DQA:** _____ **Date:** _____

Resolution: _____ **Disposition:** _____ **QA: N/C Closed:** _____ **Date:** _____

NCR:		WORK ORDER NON-CONFORMANCE (NCR)						
DATE	STEP	Description of NC Section A	Corrective Action Section B			Verification Section C	Approval Chief Eng	Approval QC Inspector
			Initial Chief Eng	Action Description Chief Eng	Sign & Date			

NOTE: Date & initial all entries

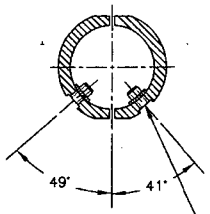

SECTION B–B

ø0.297
C'BORE ø0.430 x 0.100
INSTALL ALS4–1032–225 (OR AKS4–1032–225
OR ALS7–1032–225 OR AKS7–1032–225)
INSERTS AFTER FINISH
(4 PLACES)

4

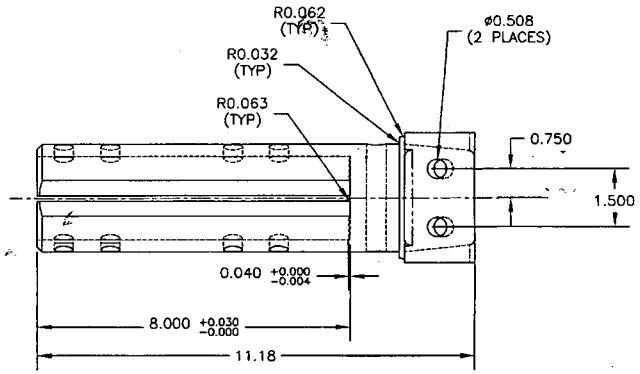

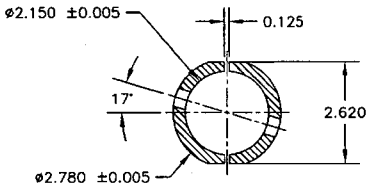

SECTION A–A

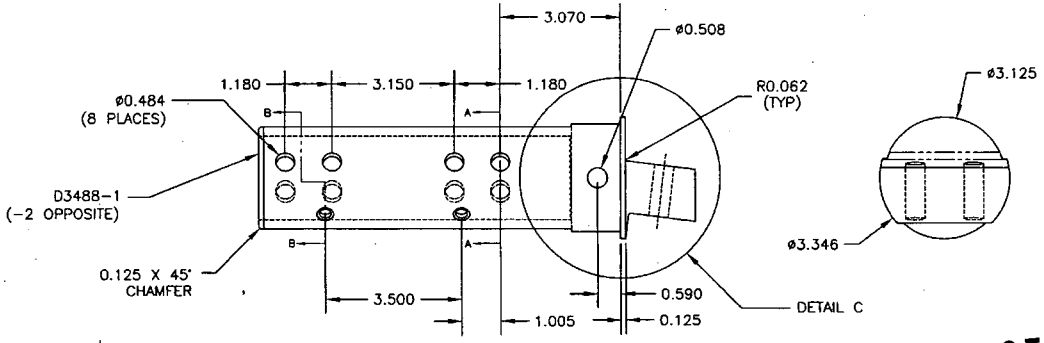

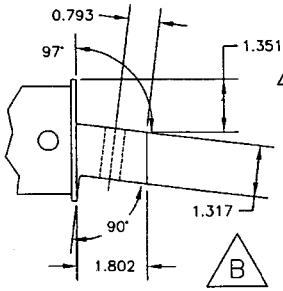

DETAIL C

D3488–041 SHOWN (D3488–042 OPPOSITE)

RELEASED
06.03.15 PH
PER DS
ECN #734

D3488–041/–042 BLADE FITTING ASSEMBLY PARTS LIST

QTY -041	QTY -042	PART NUMBER	DESCRIPTION
X		D3488-041	BLADE FITTING ASSEMBLY (LH)
	X	D3488-042	BLADE FITTING ASSEMBLY (RH)
1		D3488-1	BLADE FITTING (LH)
	1	D3488-2	BLADE FITTING (RH)
4	4	ALS4-1032-225 or AKS4-1032-225 or ALS7-1032-225 or AKS7-1032-225	INSERT

D3488–041/–042 BLADE FITTING

1) MATERIAL: MAKE D3488–1/–2 FROM ALUMINUM 7075–T7351 ROUND BAR PER QQ–A–225/9 (REF. DART MATERIAL SPEC M7075T73R)
2) FINISH: ACID ETCH, ALODINE PER DART QSI 005 4.1
POWDER COAT WHITE (REF 4.3.5.1) PER DART QSI 005 4.3
3) BREAK UNMARKED SHARP EDGES 0.010 TO 0.020
4) INSTALL INSERTS AFTER POWDER COAT
5) ALL DIMENSIONS ARE IN INCHES
6) TOLERANCES ARE PER DART QSI 018 UNLESS OTHERWISE NOTED

B	06.03.15	CHANGE THICKNESS
A	05.12.20	NEW ISSUE

DESIGN PH	DRAWN BY PH	DART AEROSPACE USA, INC. PORT HADLOCK, WA	
CHECKED	APPROVED	DRAWING NO. D3488	REV. B SHEET 1 OF 1
DATE 06.03.15		TITLE BLADE FITTING	SCALE 1:3

252

Dart Aerospace Ltd

W/O:		WORK ORDER CHANGES					
DATE	STEP	PROCEDURE CHANGE	By	Date	Qty	Approval Chief Eng / Prod Mgr	Approval QC Inspector

Part No: _____ **PAR #:** _____ **Fault Category:** _____ **NCR:** Yes No **DQA:** _____ **Date:** _____

Resolution: _____ **Disposition:** _____ **QA: N/C Closed:** _____ **Date:** _____

NCR:		WORK ORDER NON-CONFORMANCE (NCR)						
DATE	STEP	Description of NC Section A	Corrective Action Section B			Verification Section C	Approval Chief Eng	Approval QC Inspector
			Initial Chief Eng	Action Description Chief Eng	Sign & Date			

NOTE: Date & initial all entries

H:\fFORMS\Quality Assurance\approved QA\NCRWO RevE

DESIGN	DRAWN BY	DART AEROSPACE USA, INC. PORT HADLOCK, WA	REV. D
CHECKED	APPROVED	DRAWING NO. DSK 101	SHEET 1 OF 1
DATE 06.05.09		TITLE D3488-1/-2 TURNING DETAIL	SCALE 1:3

A	05.12.21	NEW ISSUE
B	06.03.02	ADD TOLERANCES AND RADIUS
C	06.04.17	0.188 WAS 0.125
D	06.05.09	REMOVE DIAMETER FOR CHAMFER

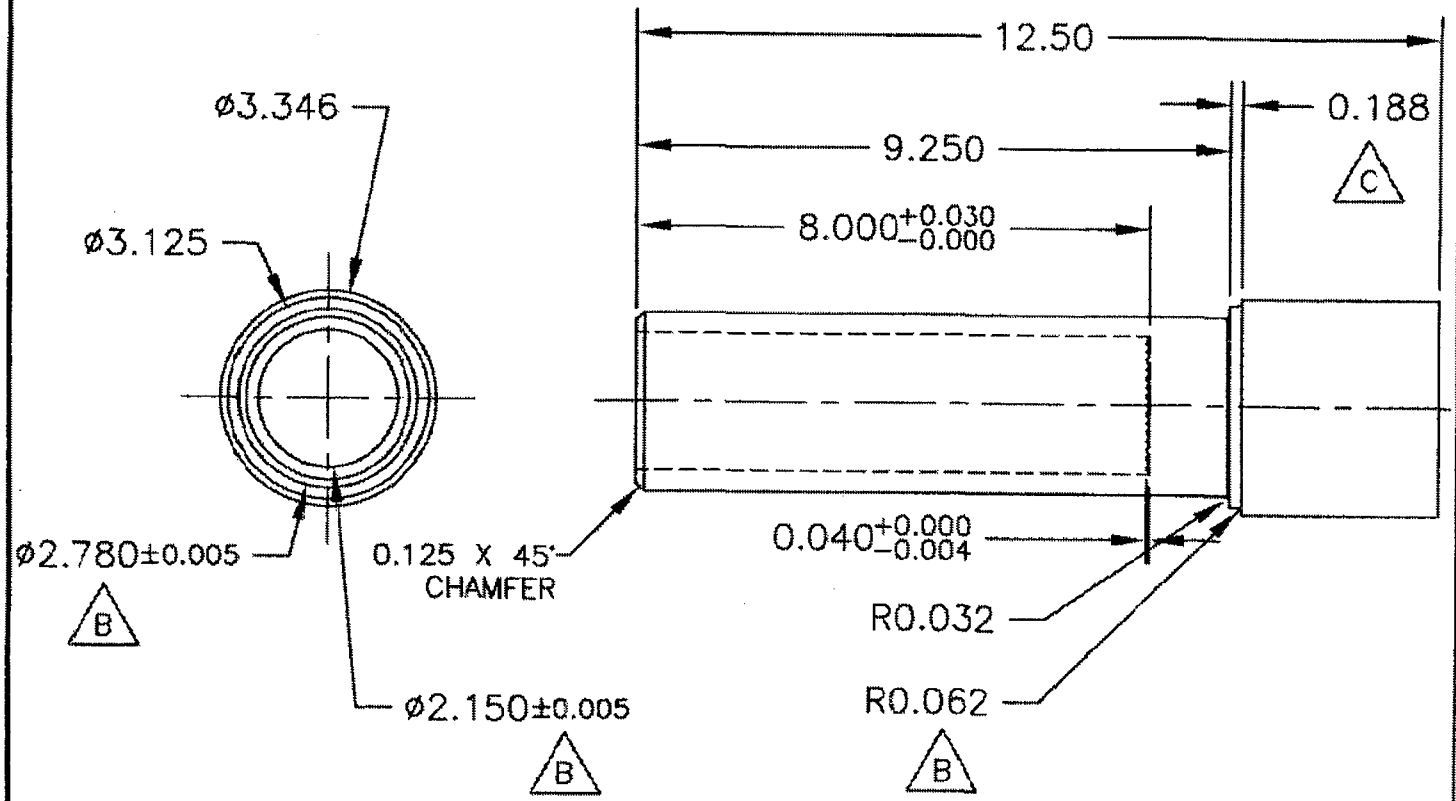

DSK 101

1) MATERIAL: MAKE FROM ALUMINUM 7075-T7351 ROUND BAR PER QQ-A-225/9 (REF. DART MATERIAL SPEC M7075T73R)
2) FINISH: NONE
3) BREAK UNMARKED SHARP EDGES 0.010 TO 0.020
4) ALL DIMENSIONS ARE IN INCHES
5) TOLERANCES ARE PER DART QSI 018 UNLESS OTHERWISE NOTED